BLAGDON PUMP®

IDEX FLUID & METERING

See page 17 for ATEX ratings

CE

SERVICE AND OPERATING MANUAL

Original Instructions

X50 Metal Flap Valve Pump

Design Level 6

Table of Contents

Engineering Data and Performance Curve 1
Explanation of Pump Nomenclature 2
Dimensions 3
Principle of Operation 4
Installation and Start-Up 4
Air Supply 4
Air Inlet & Priming 4
Installation Guide 5
Externally Serviceable Air Distribution System 6
Air Exhaust 7
Between Uses 7
Check Valve Servicing 7
Diaphragm Servicing 7
Pilot Valve 8
Pilot Valve Actuator 8
Service Instructions: Troubleshooting 9
Warranty 9
Grounding The Pump 10
Important Safety Information 11
Recycling 11
Material Codes 12
Composite Repair Parts List 13-14
Composite Repair Drawing 15
CE Declaration of Conformity - Machinery 16
CE Declaration fo Conformity - ATEX 17

IDEX Pump Technologies (Ireland) Ltd., • A Unit of IDEX Corporation, R79, Shannon, Co Clare, IRELAND.
• TEL: +353 61 471933 FAX: +353 61 475046 www.blagdonpump.com • e-Mail: sales@blagdonpump.com

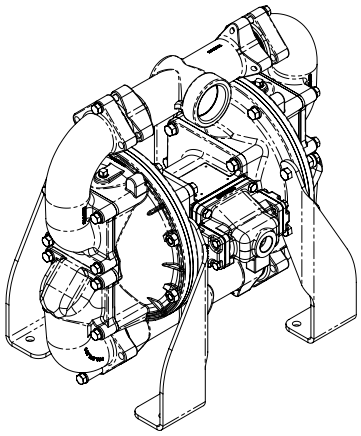

BLAGDON PUMP®

X50 Metal Flap Valve Pump

Design Level 6

Air-Operated Double Diaphragm Pump

ENGINEERING, PERFORMANCE & CONSTRUCTION DATA

See page 17 for ATEX ratings

SUCTION/DISCHARGE PIPE SIZE	CAPACITY	AIR VALVE	SOLIDS-HANDLING	HEADS UP TO
2" NPT (F)	0 to 140 gallons per minute (0 to 530 liters per minute)	No-lube, no-stall design	*Up to 2" (50mm)*	125 psi or 289 ft. of water (8.8 Kg/cm² or 88 meters)

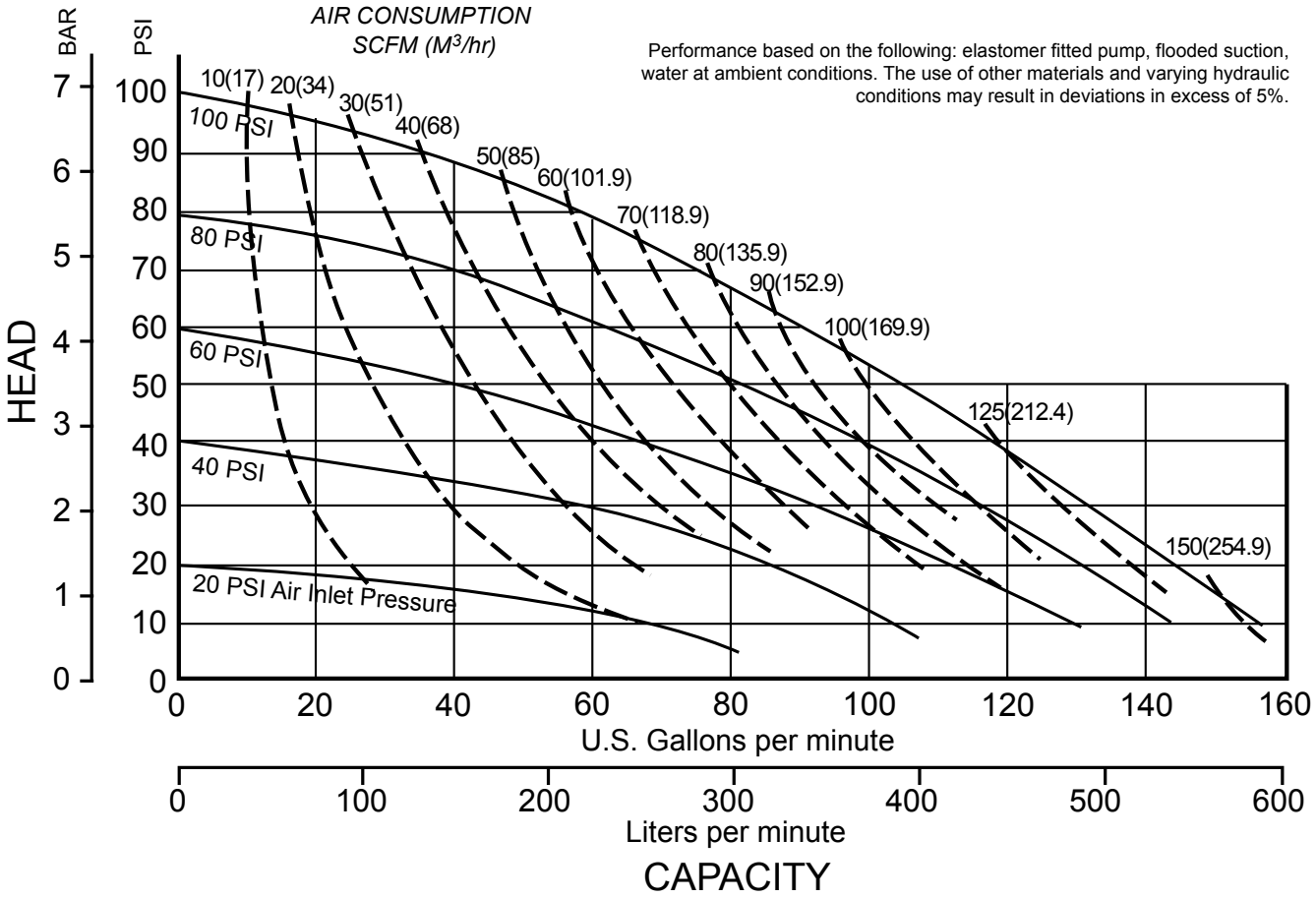

Performance based on the following: elastomer fitted pump, flooded suction, water at ambient conditions. The use of other materials and varying hydraulic conditions may result in deviations in excess of 5%.

Pumps are designed to be powered only by compressed air.

TYPICAL CODE= X50. 01. A. A. F. T. B. B. S.

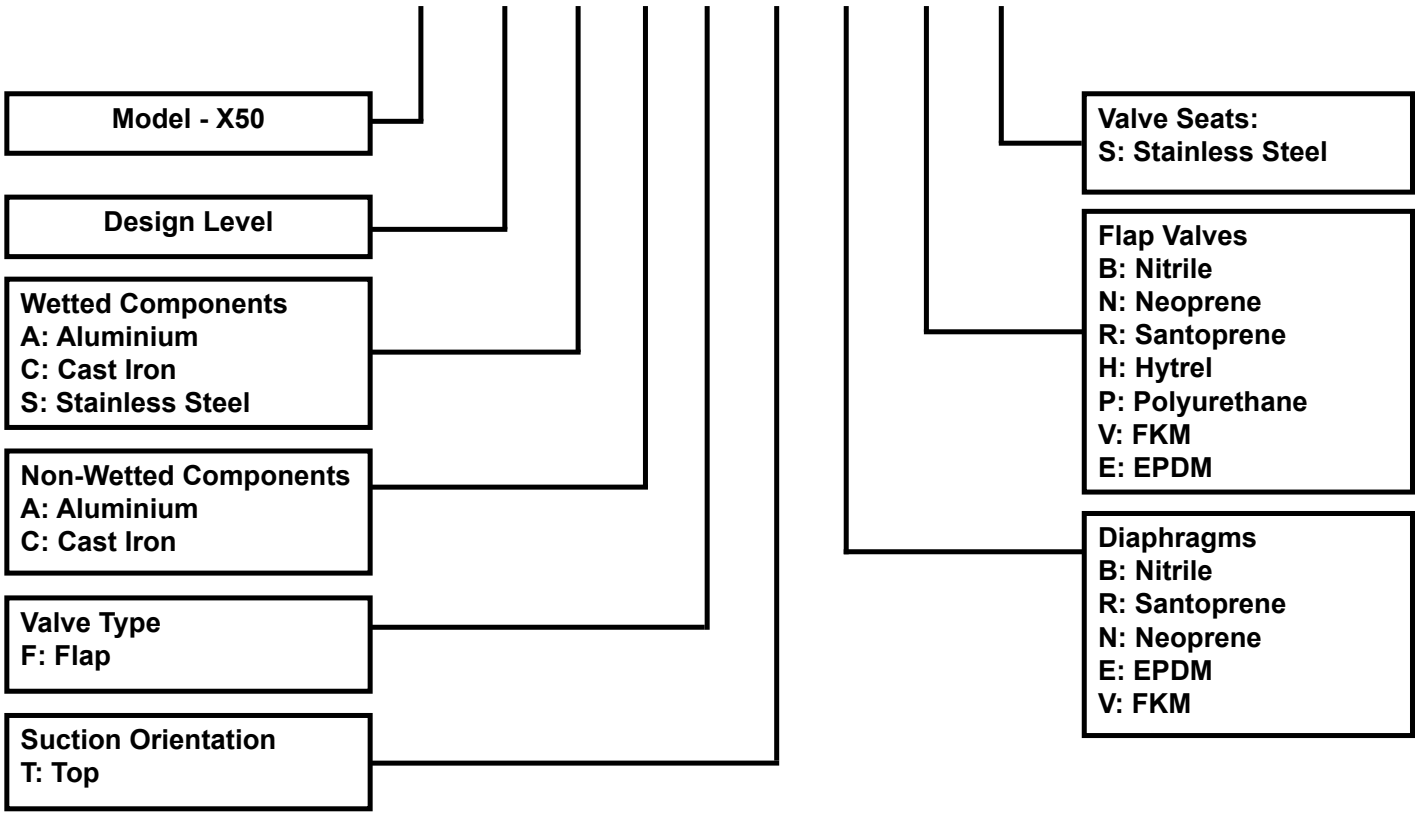

II 2GD T5
II 1G c T5
II 3/1 G c T5
II 1D c T100°C
I M1 c
I M2 c

Models equipped with Wetted Options
C or S , Non-Wetted Options C.
Note: See EC-Type Certificate.

II 2G c T5
II 3/2 G c T5
II 2D c T100°C

Models equipped with Aluminium components
Note: See Type Examination Certification

Maximum delivery: 530 ltrs/min
Max. working pressure: 8.6 bar
Max. solid particle size: 50mm
Air inlet: 3/4" NPT
Temperatur limits: Determined by elastomers
Fluid suction/discharge: 2" NPT

Intallation: Surface mounted
Accessories included: Metal Exhaust air silencer
Shipping weights with
Aluminium mid sections: A: 32kg
C: 50kg
S: 50kg
Cast Iron mid sections: C: 63 kg
S: 63 kg

Materials and Dimensions

Maximum and Minimum Temperatures are the limits for which these materials can be operated. Temperatures coupled with pressure affect the longevity of diaphragm pump components. Maximum life should not be expected at the extreme limits of the temperature ranges.

Materials	Operating Temperatures Maximum	Minimum
Nitrile/FDA White Nitrile General purpose, oil-resistant. Shows good solvent, oil, water and hydraulic fluid resistance. Should not be used with highly polar solvents like acetone and MEK, ozone, chlorinated hydrocarbons and nitro hydrocarbons.	190°F 88°C	-10°F -23°C
EPDM Shows very good water and chemical resistance. Has poor resistance to oil and solvents, but is fair in ketones and alcohols.	280°F 138°C	-40°F -40°C
NEOPRENE All purpose. Resistant to vegetable oils. Generally not affected by moderate chemicals, fats, greases and many oils and solvents. Generally attacked by strong oxidizing acids, ketones, esters, nitro hydrocarbons and chlorinated aromatic hydrocarbons.	200°F 93°C	-10°F -23°C
HYTREL® Good on acids, bases, amines and glycols at room temperature.	220°F 104°C	-20°F -29°C
FKM (Fluorocarbon) shows good resistance to a wide range of oils and solvents; especially all aliphatic, aromatic and halogenated hydrocarbons, acids, animal and vegetable oils. Hot water or hot aqueous solutions (over 70°F) will attack FKM.	350°F 177°C	-40°F -40°C
Urethane Shows good resistance to abrasives. Has poor resistance to most solvents and oils.	150°F 66°C	+32°F 0°C
Santoprene® Injection molded thermoplastic elastomer with no fabric layer. Long mechanical flex life. Excellent abrasion resistance.	275°F 135°C	-40°F -40°C
‡ **CF-8M Stainless Steel** equal to or exceeding ASTM specification A743 for corrosion resistant iron chromium, iron chromium nickel, and nickel based alloy castings for general applications. Commonly referred to as 316 Stainless Steel in the pump industry.		

For specific applications, always consult “Chemical Resistance Chart" Technical Bulletin

This pump also available in dual port design.
See price book or consult factory for details.

Dimensions are ± 1/8"
Figures in parenthesis = millimeters

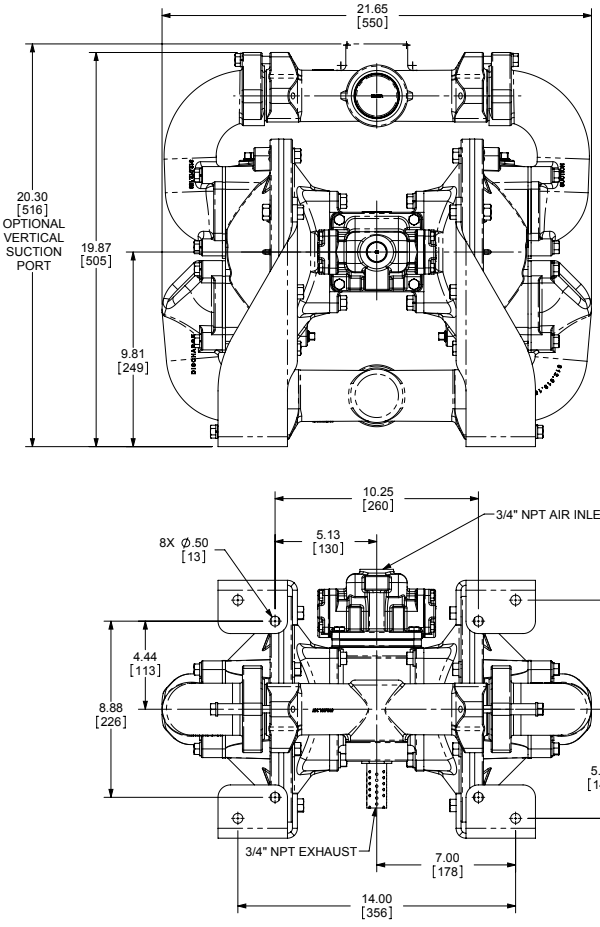

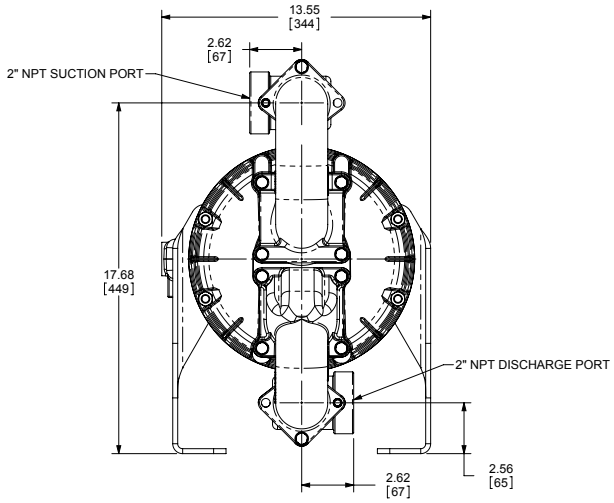

2" NPT(F) Suction and Discharge • ¾" NPT(F) Air Inlet Port • ¾" NPT(F) Air Exhaust Port (not shown)

PRINCIPLE OF PUMP OPERATION

This flap swing check valve pump is powered by compressed air and is a 1:1 pressure ratio design. It alternately pressurizes the inner side of one diaphragm chamber, while simultaneously exhausting the other inner chamber. This causes the diaphragms, which are connected by a common rod, to move endwise. Air pressure is applied over the entire surface of the diaphragm, while liquid is discharged from the opposite side. The diaphragm operates under a balanced condition during the discharge stroke, which allows the unit to be operated at discharge heads over 200 feet (61 meters) of water head.

Since the diaphragms are connected by a common rod, secured by plates to the center of the diaphragms, one diaphragm performs the discharge stroke, while the other is pulled to perform the suction stroke in the opposite chamber.

For maximum diaphragm life, keep the pump as close to the liquid being pumped as possible. Positive suction head in excess of 10 feet of liquid (3.048 meters) may require a back pressure regulating device. This will maximize diaphragm life.

Alternate pressuring and exhausting of the diaphragm chamber is performed by means of an externally mounted, pilot operated, four-way spool type air distribution valve. When the spool shifts to one end of the valve body, inlet air pressure is applied to one diaphragm chamber and the other diaphragm chamber exhausts. When the spool shifts to the opposite end of the valve body, the porting of chambers is reversed. The air distribution valve spool is moved by an internal pilot valve which alternately pressurizes one side of the air distribution valve spool, while exhausting the other side. The pilot valve is shifted at each end of the diaphragm stroke by the diaphragm plate coming in contact with the end of the pilot valve spool. This pushes it into position for shifting of the air distribution valve.

The chambers are manifolded together with a suction and discharge check valve for each chamber, maintaining flow in one direction through the pump.

INSTALLATION & START-UP

Locate the pump as close to the product being pumped as possible, keeping suction line length and number of fittings to a minimum. Do not reduce line size.

For installations of rigid piping, short flexible sections of hose should be installed between pump and piping. This reduces vibration and strain to the piping system. A pulsation dampener is recommended to further reduce pulsation in flow.

This pump was tested at the factory prior to shipment and is ready for operation. It is completely self-priming from a dry start for suction lifts of 20 feet (6.096 meters) or less. For suction lifts exceeding 20 feet of liquid, fill the chambers with liquid prior to priming.

AIR SUPPLY

Air supply pressures cannot exceed 125 psi (8.61 bar). Connect the pump air inlet to an air supply of sufficient capacity and pressure required for desired performance. When the air line is solid piping, use a short length of flexible hose (not less than 3/4" (19mm) in diameter) between pump and piping to eliminate strain to pipes.

AIR INLET & PRIMING

For start-up, open an air valve approximately 1/2" to 3/4" turn. After the unit primes, an air valve can be opened to increase flow as desired. If opening the valve increases cycling rate, but does not increase flow rate, cavitation has occurred, and the valve should be closed slightly.

For the most efficient use of compressed air and the longest diaphragm life, throttle the air inlet to the lowest cycling rate that does not reduce flow.

BLAGDON PUMP®

IDEX FLUID & METERING

INSTALLATION GUIDE

Bottom Discharge Flap Valve Unit

Available from Distributor

Available from

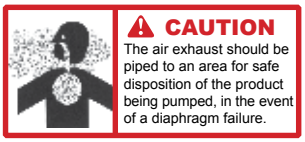

CAUTION

The air exhaust should be piped to an area for safe disposition of the product being pumped, in the event of a diaphragm failure.

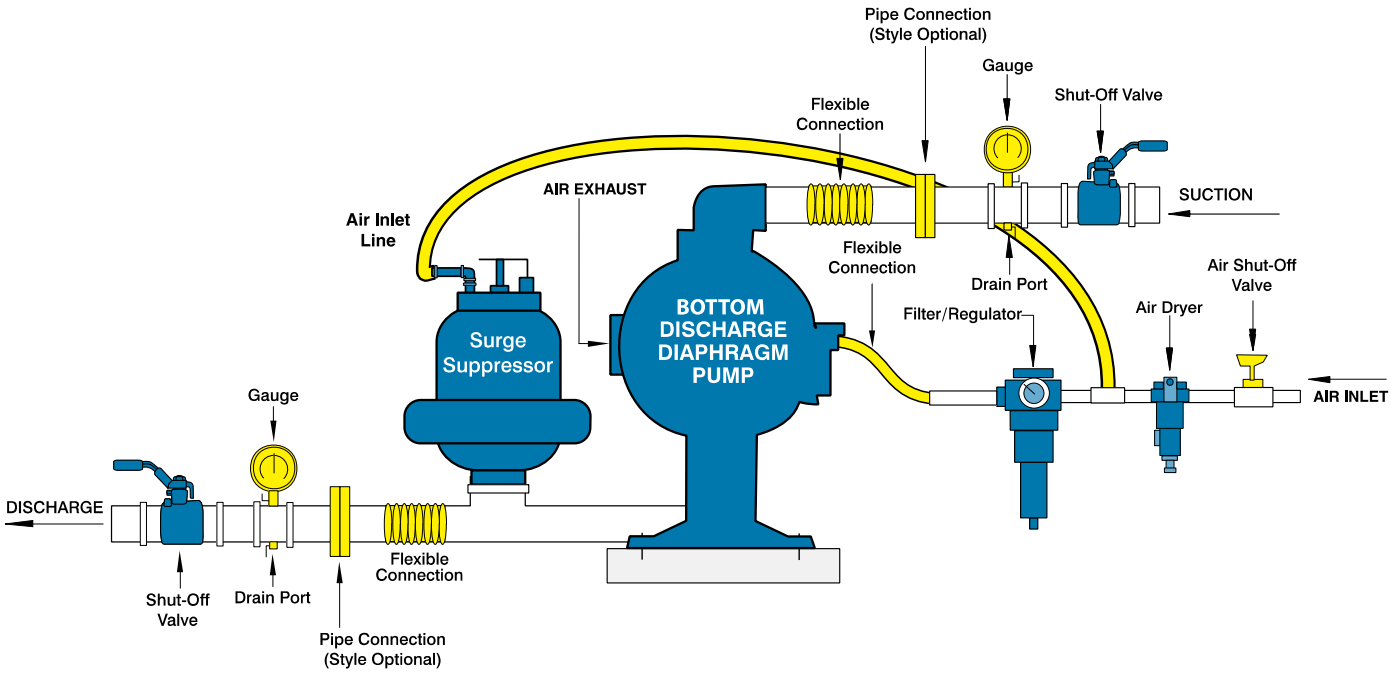

AIR VALVE LUBRICATION

The pump's pilot valve and main air valve assemblies are designed to operate WITHOUT lubrication. This is the preferred mode of operation. There may be instances of personal preference, or poor quality air supplies when lubrication of the compressed air supply is required. The pump air system will operate with properly lubricated compressed air supplies. Proper lubrication of the compressed air supply would entail the use of an air line lubricator set to deliver one drop of 10 weight, non-detergent oil for every 20 SCFM of air the pump consumed at its point of operation. Consult the pump's published Performance Curve to determine this.

It is important to remember to inspect the sleeve and spool set routinely. It should move back and forth freely. This is most important when the air supply is lubricated. If a lubricator is used, oil accumulation will, over time, collect any debris from the compressed air. This can prevent the pump from operating properly.

Water in the compressed air supply can create problems such as icing or freezing of the exhaust air causing the pump to cycle erratically, or stop operating. This can be addressed by using a point of use air dryer (available from Warren Rupp) to supplement a plant's air drying equipment. This device will remove excess water from the compressed air supply and alleviate the icing or freezing problem.

EXTERNALLY SERVICEABLE AIR DISTRIBUTION SYSTEM

Please refer to the exploded view drawing and parts list in the Service Manual supplied with your pump. If you need replacement or additional copies, contact your local Distributor, or the factory Literature Department at the number shown below. To receive the correct manual, you must specify the MODEL information found on the name plate of the pump.

MODELS WITH 1" SUCTION/DISCHARGE OR LARGER AND METAL CENTER SECTIONS

The main air valve sleeve and spool set is located in the valve body mounted on the pump with four hex head capscrews. The valve body assembly is removed from the pump by removing these four hex head capscrews.

With the valve body assembly off the pump, access to the sleeve and spool set is made by removing four hex head capscrews (each end) on the end caps of the valve body assembly. With the end caps removed, slide the spool back and forth in the sleeve. The spool is closely sized to the sleeve and must move freely to allow for proper pump operation. An accumulation of oil, dirt or other contaminants from the pump's air supply, or from a failed diaphragm, may prevent the spool from moving freely. This can cause the spool to stick in a position that prevents the pump from operating. If this is the case, the sleeve and spool set should be removed from the valve body for cleaning and further inspection.

Remove the spool from the sleeve. Using an arbor press or bench vise (with an improvised mandrel), press the sleeve from the valve body. Take care not to damage the sleeve. At this point, inspect the o-rings on the sleeve for nicks, tears or abrasions. Damage of this sort could happen during assembly or servicing. A sheared or cut o-ring can allow the pump's compressed air supply to leak or bypass within the air valve assembly, causing the pump to leak compressed air from the pump air exhaust or not cycle properly. This is most noticeable at pump dead head or high discharge pressure conditions. Replace any of these o-rings as required or set up a routine, preventive maintenance schedule to do so on a regular basis. This practice should include cleaning the spool and sleeve components with a safety solvent or equivalent, inspecting for signs of wear or damage, and replacing worn components.

To re-install the sleeve and spool set, lightly lubricate the o-rings on the sleeve with an o-ring assembly lubricant or lightweight oil (such as 10 wt. air line lubricant). Press the set into the valve body easily, without shearing the o-rings. Re-install one end cap, gasket and bumper on the valve body. Using the arbor press or bench vise that was used in disassembly, press the sleeve back into the valve body. You may have to clean the surfaces of the valve body where the end caps mount. Material may remain from the old gasket. Old material not cleaned from this area may cause air leakage after reassembly. Take care that the bumper stays in place allowing the sleeve to press in all the way. Reinstall the spool, the opposite end cap, gasket and bumper on the valve body. After inspecting and cleaning the gasket surfaces on the valve body and intermediate, reinstall the valve body on the pump using new gaskets. Tighten the four hex head capscrews evenly and in an alternating cross pattern.

that the bumper stays in place allowing the sleeve to press in all the way. Reinstall the spool, opposite end cap, gasket and bumper on the valve body. After inspecting and cleaning the gasket surfaces on the valve body and intermediate, reinstall the valve body on the pump using new gaskets. Tighten the four hex head capscrews evenly and in an alternating cross pattern.

AIR EXHAUST

If a diaphragm fails, the pumped liquid or fumes can enter the air end of the pump, and be exhausted into the atmosphere. When pumping hazardous or toxic materials, pipe the exhaust to an appropriate area for safe disposition.

This pump can be submerged if materials of construction are compatible with the liquid. The air exhaust must be piped above the liquid level. Piping used for the air exhaust must not be smaller than 1" (2.54 cm). Reducing the pipe size will restrict air flow and reduce pump performance .When the product source is at a higher level than the pump (flooded suction), pipe the exhaust higher than the product source to prevent siphoning spills.

Freezing or icing-up of the air exhaust can occur under certain temperature and humidity conditions. Use of an air dryer unit should eliminate most icing problems.

BETWEEN USES

When used for materials that tend to settle out or transform to solid form, the pump should be completely flushed after each use, to prevent damage. Product remaining in the pump between uses could dry out or settle out. This could cause problems with valves and diaphragms at re-start. In freezing temperatures, the pump must be drained between uses in all cases.

FLAP VALVE SERVICING

Valve inspection requires removal of 3/8" hex nuts and elbows. When the top suction elbows are removed, the valve and seat are connected as an assembly. When the bottom discharge elbows are removed, the valve and seat stay with the outer chamber. Visual inspection and cleaning is possible. If parts are to be replaced, remove the self-locking nuts and all parts are accessible.

DIAPHRAGM SERVICING

Diaphragms can be inspected or the diaphragm assembly removed without removing the suction and discharge flanges. Remove (8) nuts around the chamber flange, and the housing assembly will pull off. Flap valves can be inspected for proper seating at this point as well as the diaphragm. Use care to keep foreign matter from behind the diaphragm. The opposite diaphragm may be inspected by the same procedure. If either diaphragm has to be replaced, follow closely these steps: Pull the outer diameter of one diaphragm off the (8) capscrews. NOTE: One side only! On the free diaphragm assembly, use a 3/8" allen wrench to turn the assembly (diaphragm, plates and screw) loose from the shaft. Once the assembly has turned, it will turn out by hand by use of the diaphragm. Now the opposite diaphragm assembly and the drive shaft will pull free from the capscrews and pump intermediate assembly. The interior components consisting of sleeve bearings, rod seals, and pilot valve actuator bushings are now accessible for service if required. Hold the shaft in a clamping device making sure to protect surface of shaft so as not to scratch or mar it in any way. The diaphragm assembly will turn loose. To disassemble the components, turn a 1/4"-20 capscrew by hand into the tapped hole in the inner plate. This keeps the plate from turning while the socket head capscrew is removed. To do this, place assembly in a vise so the two protruding ends of screws are loose in the vise jaws (about 3/4" apart). Turn the center screw loose from the back plate and the assembly will come apart.

REASSEMBLY

All procedures for reassembling the pump are the reverse of the previous instructions with further instructions as shown:

1. The diaphragm assemblies are to be installed with the natural bulge outward or toward the head of the center screw. Make sure both plates are installed with outer radii against the diaphragm. After all components are in position in a vise and hand tight, set a torque wrench for 480 inch pounds (40 ft. pounds) (54.23 Newton meters) or, 600 inch pounds (50 ft. pounds) (67.79 Newton meters) for Santoprene, using a (3/8") allen head socket. After each diaphragm sub assembly has been completed, thread one assembly into the shaft (held near the middle in a vise having soft jaws to protect the finish) making sure the stainless steel washer is in place on the capscrew.

Make sure 1/4"-20 mounting screw has been removed and that the bumper (Item #19 on drawing) is in place in the shaft.

Install this sub assembly into the pump and secure by placing the outer chamber housing and capscrews on the end with the diaphragm. This will hold the assembly in place while the opposite side is installed. Make sure the last diaphragm assembly is torqued to 30 ft. lbs. (40.67 Newton meters) before placing the outer diaphragm over the capscrews. If the holes in the diaphragm flange do not line up with the holes in the chamber flange, turn the diaphragm assembly in the direction of tightening to align the holes so that the capscrews can be inserted. This final torquing of the last diaphragm assembly will lock the two diaphragm assemblies together. Place remaining outer chamber on the open end and tighten down the securing nuts

gradually and evenly on both sides.

Caution should be used while reassembling Flap valves. The valves are designed for some preload over the retainer hinge pad. This is done to insure proper face contact with the seat. After all parts are in place, tighten the lock nuts down on the assembly to the point where visual inspection shows that seat and valve face mate without gap. This is important for dry prime. However, after priming action has started, valves will function due to differential pressure without concern or trouble.

PILOT VALVE

The pilot valve assembly is accessed by removing the main air distribution valve body from the pump and lifting the pilot valve body out of the intermediate housing.

Most problems with the pilot valve can be corrected by replacing the o-rings. Always grease the spool prior to inserting it into the sleeve. If the sleeve is removed from the body, reinsertion must be at the chamfered side. Grease the o-rings to slide the sleeve into the valve body. Securely insert the retaining ring around the sleeve. When reinserting the pilot valve, push both plungers (located inside the intermediate bracket) out of the path of the pilot valve spool ends to avoid damage.

PILOT VALVE ACTUATOR

Bushings for the pilot valve actuators are threaded into the intermediate bracket from the outside. The plunger may be removed for inspection or replacement. First remove the air distribution valve body and the pilot valve body from the pump. The plungers can be located by looking into the intermediate. It may be necessary to use a fine piece of wire to pull them out. The bushing can be turned out through the inner chamber by removing the outer chamber assembly. Replace the bushings if pins have bent.

TROUBLESHOOTING - For additional information, see the Troubleshooting Guide.

PROBLEM

Pump cycles but will not pump. (Note: higher suction lifts require faster cycling speed for priming.)

POSSIBLE CAUSES:

A. Air leak in suction line.
B. Excessive suction lift.
C. Flap valve not seating properly.
D. Leakage at joint of suction manifold or elbow flange.
E. Suction line or strainer plugged.
F. Diaphragm ruptured.

PROBLEM

Pump will not cycle. (Note: Always disconnect air supply to relieve air pressure before disassembling any portion of pump.)

POSSIBLE CAUSES:

A. Discharge hose or line plugged, or discharge head requirement greater than air supply pressure. (Disconnect discharge line to check.)
B. Spool in air distribution valve not shifting. (Remove end cap and check spool — must slide freely.)
C. Diaphragm ruptured. (Air will escape out discharge line in this case.)
D. Blockage in diaphragm chamber preventing movement. (Shut off air supply and reopen after pressure is relieved.)

PROBLEM

Uneven discharge flow. (Indicates one chamber not operating properly.)

POSSIBLE CAUSES:

A. Flap valve not sealing properly in one chamber.
B. Diaphragm failure in one chamber.
C. Air leak at suction manifold joint or elbow flange one side.

For additional information, see the Troubleshooting Guide.

WARRANTY:

This unit is guaranteed for a period of five years against defective material and workmanship.

Grounding The Pump

⚠ WARNING

Take action to prevent static sparking. Fire or explosion can result, especially when handling flammable liquids. The pump, piping, valves, containers or other miscellaneous equipment must be grounded.

This 8 foot long (244 centimeters) Ground Strap, part number 920-025-000, can be ordered as a service item.

To reduce the risk of static electrical sparking, this pump must be grounded. Check the local electrical code for detailed grounding instruction and the type of equipment required.

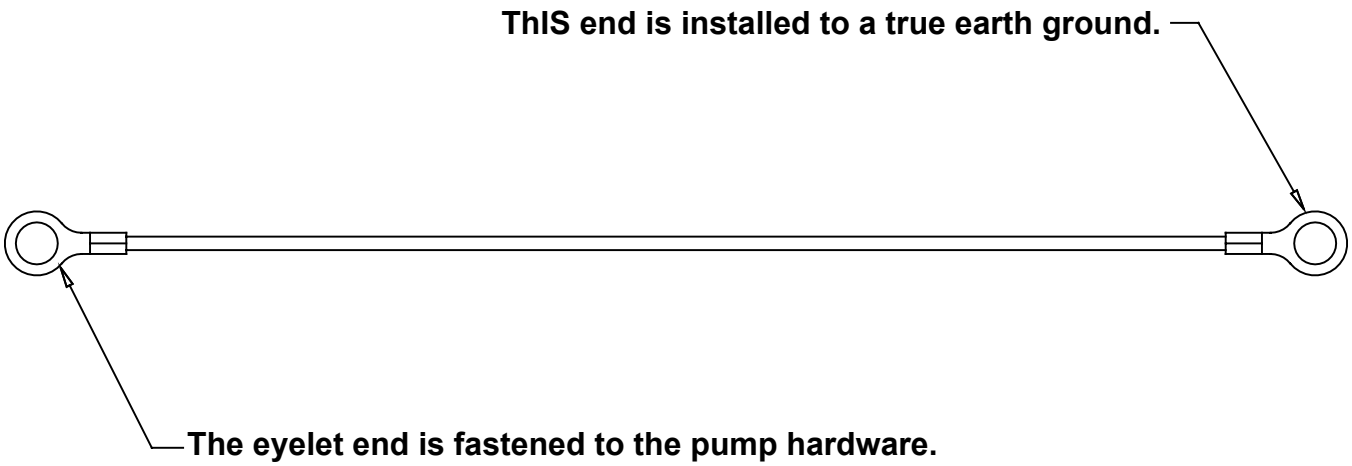

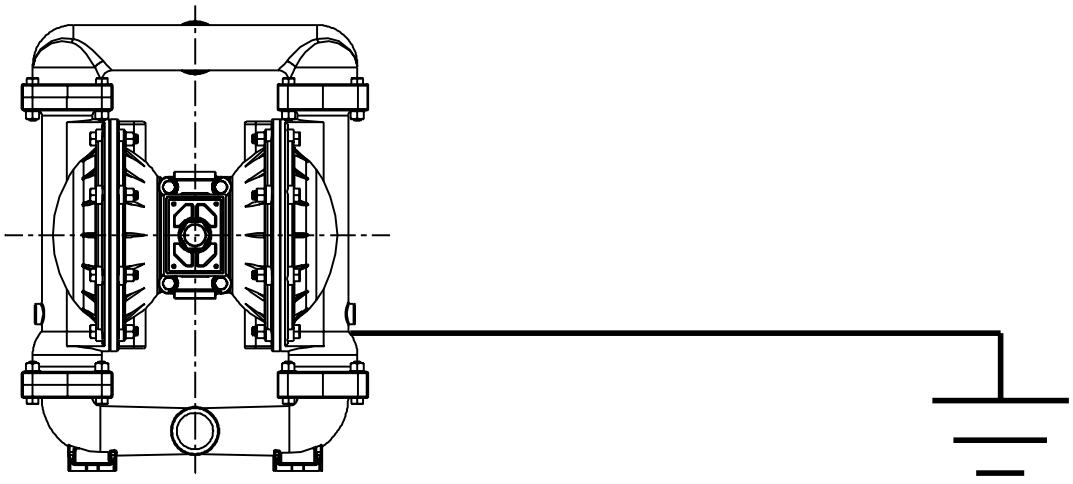

To reduce the risk of static electrical sparking, this pump must be grounded. Check the local electrical code for detailed grounding instruction and the type of equipment required, or in the absence of local codes, an industry or nationally recognized code having juristiction over specific installations.

IMPORTANT SAFETY INFORMATION

⚠ IMPORTANT

Read these safety warnings and instructions in this manual completely, before installation and start-up of the pump. It is the responsibility of the purchaser to retain this manual for reference. Failure to comply with the recommendations stated in this manual will damage the pump, and void factory warranty.

⚠ CAUTION

Before pump operation, inspect all gasketed fasteners for looseness caused by gasket creep. Re-torque loose fasteners to prevent leakage. Follow recommended torques stated in this manual.

⚠ WARNING

Before maintenance or repair, shut off the compressed air line, bleed the pressure, and disconnect the air line from the pump. The discharge line may be pressurized and must be bled of its pressure.

⚠ WARNING

In the event of diaphragm rupture, pumped material may enter the air end of the pump, and be discharged into the atmosphere. If pumping a product which is hazardous or toxic, the air exhaust must be piped to an appropriate area for safe disposition.

⚠ WARNING

Take action to prevent static sparking. Fire or explosion can result, especially when handling flammable liquids. The pump, piping, valves, containers or other miscellaneous equipment must be grounded. (See page 10)

⚠ WARNING

This pump is pressurized internally with air pressure during operation. Always make certain that all bolting is in good condition and that all of the correct bolting is reinstalled during assembly.

⚠ WARNING

When used for toxic or aggressive fluids, the pump should always be flushed clean prior to disassembly.

⚠ WARNING

Before doing any maintenance on the pump, be certain all pressure is completely vented from the pump, suction, discharge, piping, and all other openings and connections. Be certain the air supply is locked out or made non-operational, so that it cannot be started while work is being done on the pump. Be certain that approved eye protection and protective clothing are worn all times in the vicinity of the pump. Failure to follow these recommendations may result in serious injury or death.

⚠ WARNING

Airborne particles and loud noise hazards.

Wear ear and eye protection.

RECYCLING

Many components of AODD pumps are made of recyclable materials (see chart on page 12 for material specifications). We encourage pump users to recycle worn out parts and pumps whenever possible, after any hazardous pumped fluids are thoroughly flushed.

MATERIAL CODES
THE LAST 3 DIGITS OF PART NUMBER

000	Assembly, sub-assembly; and some purchased items
010	Cast Iron
012	Powered Metal
015	Ductile Iron
020	Ferritic Malleable Iron
025	Music Wire
080	Carbon Steel, AISI B-1112
100	Alloy 20
110	Alloy Type 316 Stainless Steel
111	Alloy Type 316 Stainless Steel (Electro Polished)
112	Alloy C
113	Alloy Type 316 Stainless Steel (Hand Polished)
114	303 Stainless Steel
115	302/304 Stainless Steel
117	440-C Stainless Steel (Martensitic)
120	416 Stainless Steel (Wrought Martensitic)
123	410 Stainless Steel (Wrought Martensitic)
148	Hardcoat Anodized Aluminum
149	2024-T4 Aluminum
150	6061-T6 Aluminum
151	6063-T6 Aluminum
152	2024-T4 Aluminum (2023-T351)
154	Almag 35 Aluminum
155	356-T6 Aluminum
156	356-T6 Aluminum
157	Die Cast Aluminum Alloy #380
158	Aluminum Alloy SR-319
159	Anodized Aluminum
162	Brass, Yellow, Screw Machine Stock
165	Cast Bronze, 85-5-5-5
166	Bronze, SAE 660
170	Bronze, Bearing Type, Oil Impregnated
175	Die Cast Zinc
180	Copper Alloy
305	Carbon Steel, Black Epoxy Coated
306	Carbon Steel, Black PTFE Coated
307	Aluminum, Black Epoxy Coated
308	Stainless Steel, Black PTFE Coated
309	Aluminum, Black PTFE Coated
310	PVDF Coated
313	Aluminum, White Epoxy Coated
330	Zinc Plated Steel
331	Chrome Plated Steel
332	Aluminum, Electroless Nickel Plated
333	Carbon Steel, Electroless Nickel Plated
335	Galvanized Steel
336	Zinc Plated Yellow Brass
337	Silver Plated Steel
340	Nickel Plated
342	Filled Nylon
351	Food Grade Santoprene; Color: NATURAL
353	Geolast; Color: BLACK
354	Injection Molded #203-40 Santoprene- Duro 40D +/-5; Color: RED
355	Thermal Plastic
356	Hytrel; Color: BLUE
357	Injection Molded Polyurethane; Color: GREEN
358	Urethane Rubber; Color: NATURAL (Some Applications) (Compression Mold)
359	Urethane Rubber; Color: NATURAL
360	Nitrile Rubber; Color Coded: RED
361	Nitrile
363	FKM (Fluorocarbon). Color Coded: YELLOW
364	E.P.D.M. Rubber. Color Coded: BLUE
365	Neoprene Rubber; Color Coded: GREEN
366	Food Grade Nitrile; Color: WHITE
368	Food Grade EPDM; Color: GRAY
370	Butyl Rubber Color Coded: BROWN
371	Philthane (Tuftane)
374	Carboxylated Nitrile
375	Fluorinated Nitrile
378	High Density Polypropylene
379	Conductive Nitrile; Color Coded: RED & SILVER
384	Conductive Neoprene; Color Coded: GREEN & SILVER
405	Cellulose Fibre
408	Cork and Neoprene
425	Compressed Fibre
426	Blue Gard
440	Vegetable Fibre
465	Fibre
500	Delrin 500
501	Delrin 570
502	Conductive Acetal, ESD-800; Color: BLACK
503	Conductive Acetal, Glass-Filled Color: BLACK; Color Coded: YELLOW
505	Acrylic Resin Plastic
506	Delrin 150
520	Injection Molded PVDF; Color: NATURAL
521	Injection Molded Conductive PVDF; Color: BLACK; Color Coded: LIGHT GREEN
540	Nylon
541	Nylon
542	Nylon
544	Nylon Injection Molded
550	Polyethylene
551	Glass Filled Polypropylene; Color: BLACK
552	Unfilled Polypropylene; Color: NATURAL
555	Polyvinyl Chloride
556	Black Vinyl
557	Conductive Polypropylene; Color: BLACK; Color Coded: SILVER
558	Conductive HDPE; Color: BLACK Color Coded: SILVER
559	Conductive Polypropylene; Color: BLACK Color Coded: SILVER
570	Rulon II
580	Ryton
590	Valox
591	Nylatron G-S
592	Nylatron NSB
600	PTFE (virgin material) Tetrafluorocarbon (TFE)
601	PTFE (Bronze and moly filled)
602	Filled PTFE
603	Blue Gylon
604	PTFE
606	PTFE
607	Envelon
608	Conductive PTFE; Color: BLACK
610	PTFE Encapsulated Silicon
611	PTFE Encapsulated FKM
632	Neoprene/Hytrel
633	FKM/PTFE
634	EPDM/PTFE
635	Neoprene/PTFE
637	PTFE , FKM/PTFE
638	PTFE , Hytrel/PTFE
639	Nitrile/TFE
643	Santoprene®/EPDM
644	Santoprene®/PTFE
656	Santoprene Diaphragm and Check Balls/EPDM Seats
661	EPDM/Santoprene
666	FDA Nitrile Diaphragm, PTFE Overlay, Balls, and Seals
668	PTFE, FDA Santoprene/PTFE

Delrin is a registered tradename of E.I. DuPont.

Gylon is a registered tradename of Garlock, Inc.

Nylatron is a registered tradename of Polymer Corp.

Santoprene is a registered tradename of Exxon Mobil Corp.

Rulon II is a registered tradename of Dixion Industries Corp.

Ryton is a registered tradename of Phillips Chemical Co.

Valox is a registered tradename of General Electric Co.

See page 17 for ATEX ratings

Item	Part Number	Description	Qty.
1	031.012.000	SLEEVE & SPOOL SET	1
2	070.006.170	BEARING	2
3	095.043.010	BODY, AIR VALVE	1
	095.043.156	BODY, AIR VALVE	1
4	095.073.001	PILOT VALVE ASSEMBLY	1
4-A	095.070.558	BODY, PILOT VALVE	1
4-B	560.033.360	O-Ring	4
4-C	560.023.360	O-Ring (SPOOL)	2
4-D	675.037.080	RETAINING RING	1
4-E	755.025.000	SLEEVE, PILOT VALVE	1
4-F	775.026.000	SPOOL, PILOT VALVE	1
5	114.002.010	INTERMEDIATE	1
	114.002.156	INTERMEDIATE	1
6	115.158.080	BRACKET, LEG	2
7	115.159.080	BRACKET, LEG	2
8	132.002.360	BUMPER, DIAPHRAGM PLATE	2
9	132.014.358	BUMPER, AIR VALVE	2
10	135.016.162	BUSHING, THREADED, W/ O-Ring 560.001.360	2
11	165.011.010	CAP, END	2
	165.011.157	CAP, END	2
12	170.023.330	CAPSCREW, HEX HEAD (ALUMINUM ONLY)	8
12	170.023.330	CAPSCREW HEX HEAD (CAST IRON AND STAINLESS STEEL)	16
13	170.024.330	CAPSCREW, HEX HD, 7/16-14 X 1	8
14	170.026.330	CAPSCREW, HEX HEAD 3/8-16 X 3 1/2	2
15	170.032.330	CAPSCREW, HEX HEAD 1/4-20 X 3/4	8
16	170.035.330	CAPSCREW, HEX HD, 7/16-14 X 1 1/2 (ALUMINUM ONLY)	8
17	170.045.330	CAPSCREW, HEX HEAD 5/16-18 X 1 1/4	4
18	170.052.330	CAPSCREW, HEX HEAD 3/8-16 X 2 1/2	2
19	170.061.330	CAPSCREW, HEX HEAD 3/8-16 X 2	16
20	171.002.110	CAPSCREW, SOCKET HEAD	2
	171.002.330	CAPSCREW, SOCKET HEAD	2
21	196.001.010	CHAMBER, INNER	2
	196.001.157	CHAMBER, INNER	2
22	196.002.010 NS	CHAMBER, OUTER	2
	196.002.110 NS	CHAMBER, OUTER	2
	196.002.157 NS	CHAMBER, OUTER	2
23	286.007.354	DIAPHRAGM	2
	286.007.356	DIAPHRAGM	2
	286.007.360	DIAPHRAGM	2
	286.007.363	DIAPHRAGM	2
	286.007.364	DIAPHRAGM	2
	286.007.365	DIAPHRAGM	2
	286.007.366	DIAPHRAGM	2
24	312.012.010	ELBOW SUCTION	2
	312.012.110	ELBOW SUCTION	2
	312.012.156	ELBOW SUCTION	2
	334.014.010	FLANGE, SUCTION (DUAL PORTED ONLY)	2
	334.014.110	FLANGE, SUCTION (DUAL PORTED ONLY)	2
	334.014.156	FLANGE, SUCTION (DUAL PORTED ONLY)	2

Item	Part Number	Description	Qty.
25	312.013.010	ELBOW, DISCHARGE	2
	312.013.110	ELBOW, DISCHARGE	2
	312.013.156	ELBOW, DISCHARGE	2
	334.015.010	FLANGE, DISCHARGE (DUAL PORTED ONLY)	2
	334.015.156	FLANGE, DISCHARGE (DUAL PORTED ONLY)	2
26	338.005.360	FLAP VALVE	4
	338.005.363	FLAP VALVE	4
	338.005.364	FLAP VALVE	4
	338.005.365	FLAP VALVE	4
	338.005.366	FLAP VALVE	4
	338.010.354	FLAP VALVE	4
	338.010.356	FLAP VALVE	4
	338.010.357	FLAP VALVE	4
27	360.010.425	GASKET, END CAP	2
28	360.041.379	GASKET, VALVE BODY	1
29	360.048.425	GASKET, VALVE BODY	1
30	518.001.010	MANIFOLD	2
	518.001.110	MANIFOLD	2
	518.001.157	MANIFOLD	2
31	530.036.000	MUFFLER	1
32	545.007.330	NUT, HEX - 7/16-14 (ALUMINUM ONLY)	8
33	547.002.110	NUT, STOP	8
34	560.001.360	O-Ring	2
35	560.020.360	O-Ring	6
36	560.022.360	O-Ring	2
37	570.001.360	PAD, HINGE-FLAP VALVE	4
	570.001.363	PAD, HINGE-FLAP VALVE	4
	570.001.364	PAD, HINGE-FLAP VALVE	4
	570.001.365	PAD, HINGE-FLAP VALVE	4
	570.001.366	PAD, HINGE-FLAP VALVE	4
38	570.009.360	PAD, WEAR	2
	570.009.363	PAD, WEAR	2
	570.009.364	PAD, WEAR	2
	570.009.365	PAD, WEAR	2
39	612.047.330	PLATE, INNER DIAPHRAGM	2
40	612.008.330	PLATE, OUTER DIAPHRAGM	2
	612.096.110	PLATE, OUTER DIAPHRAGM (SS UNITS ONLY)	2
41	618.003.330	PLUG, PIPE, 1/4	4
41	618.003.110	PLUG, PIPE, 1/4 (STAINLESS STEEL ONLY)	2
42	620.011.114	PLUNGER, ACTUATOR	2
43	670.005.110	RETAINER, FLAP VALVE	4
44	675.013.360	RING, SEALING	4
	675.013.363	RING, SEALING	4
	675.013.364	RING, SEALING	4
	675.013.365	RING, SEALING	4
	675.013.366	RING, SEALING	4
45	685.007.120	ROD, DIAPHRAGM	1
46	720.004.360	SEAL, U-CUP	2
47	722.070.360	SEAT, FLAP VALVE	4
	722.070.363	SEAT, FLAP VALVE	4
	722.070.364	SEAT, FLAP VALVE	4
	722.070.365	SEAT, FLAP VALVE	4
48	770.005.330	SPACER (ALUMINUM ONLY)	2
49	807.018.110	STUD, 1/4-20	8
50	900.005.330	WASHER, LOCK, 3/8	20
51	900.006.330	WASHER, LOCK - 7/16 (ALUMINUM)	16
51	900.006.330	WASHER, LOCK - 7/16	8
52	902.003.000	WASHER, SEALING	2
53	560.046.360	O-Ring (STAINLESS STEEL UNITS ONLY)	2

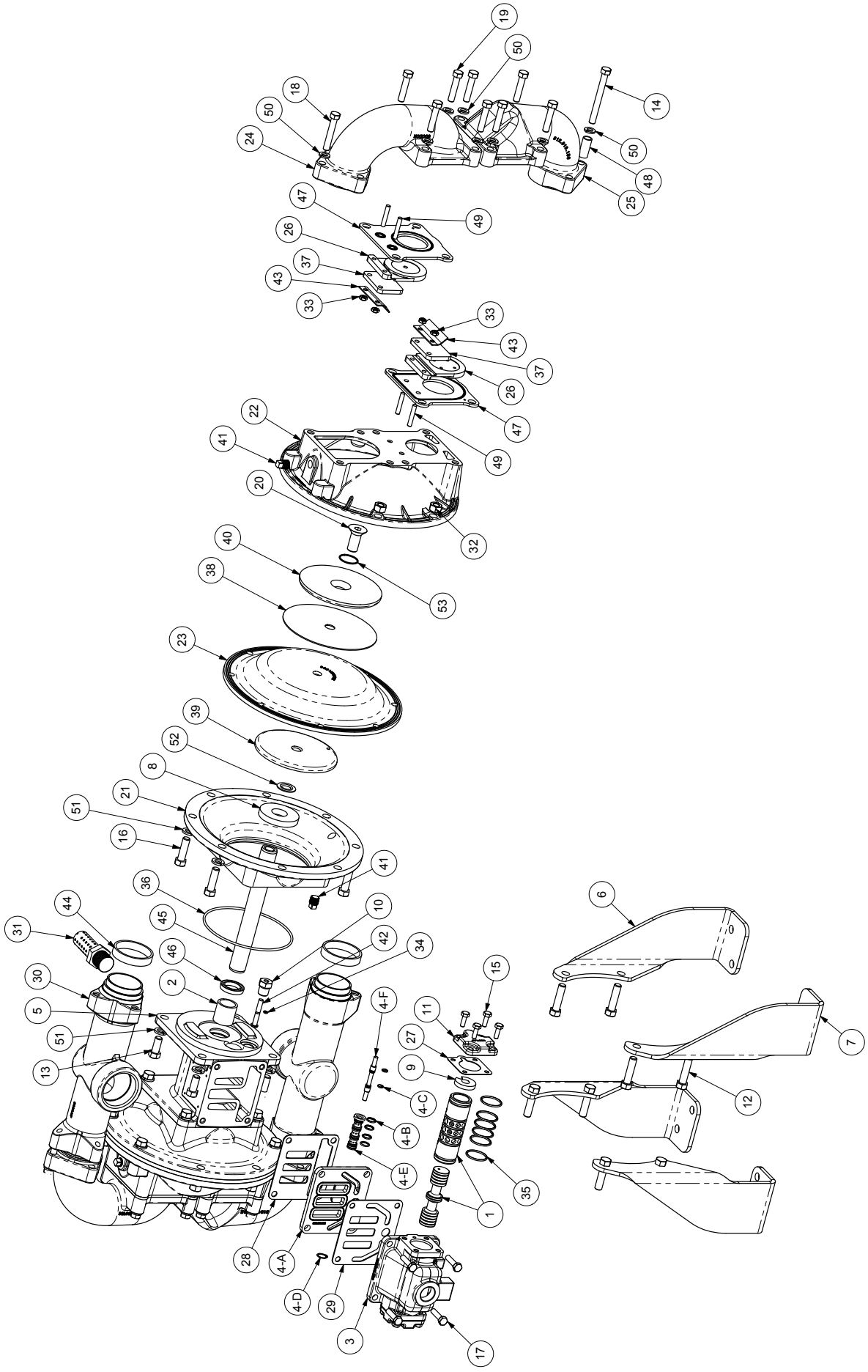
19
50
18
50
24
14
50
48
25
47
49
26
37
43
33
33
43
37
26
47
49
22
41
20
32
40
38
53
23
39
52
8
21
51
16
41
36
44
45
10
31
46
42
34
30
2
15
5
4-F
11
51
27
13
9
4-C
4-B
4-E
35
1
28
4-A
4-D
29
3
17
6
7
12

BLAGDON PUMP®

Declaration of Conformity

Manufacturer: IDEX Pump Technologies (Ireland) Ltd., • A Unit of IDEX Corporation
R79, Shannon, Co Clare, Ireland

Certifies that Air-Operated Double Diaphragm Pump Series: B75, X25, X40, X50, X75, AVB75, AVX75 and Pulsation Dampener models: PD25M, PD40M, PD50M & PD80M comply with comply with the European Community Directive 2006/42/EC on Machinery, according to Annex VIII. This product has used Harmonized Standard EN809:1998+A1:2009, Pumps and Pump Units for Liquids - Common Safety Requirements, to verify conformance.

D Monaghan
Signature of authorized person

October 20, 2005
Date of issue

Des Monaghan
Printed name of authorized person

Production & Tech. Manager
Title

Revision Level: F

May 23, 2012
Date of revision

IDEX FLUID & METERING

CE

Declaration of Conformity

Declaration of Conformity

BLAGDON PUMP®

EC Declaration of Conformity

In accordance with ATEX Directive 94/9/EC,
Equipment intended for use in potentially explosive environments.

Manufacturer: IDEX Pump Technologies (Ireland) Ltd.,
A Unit of IDEX Corporation, R79, Shannon, Co Clare, IRELAND.

AODD Pumps Equipped with Aluminium
Type Examination Certificate: KEMA 09ATEX0072 X

AODD (Air-Operated Double Diaphragm) Pumps
EC Type Examination Certificate No. Pumps: KEMA 09ATEX0071 X
KEMA Quality B.V.
Utrechtseweg 310
6812 AR Arnhem, The Netherlands

Applicable Standard:
EN13463-1: 2001,
EN13463-5: 2003

IDEX FLUID & METERING

DATE/APPROVAL/TITLE:
27 MAY 2010

Production and Technical Manager

Declaration of Conformity